

KP/DB Air Curtains

KP/DB air curtains provide an effective air barrier for large doors, gates and other external building openings, helping to protect indoor spaces from the uncontrolled inflow of outdoor air. Designed for shops, retail premises, workshops, warehouses and similar applications, they help reduce unwanted air exchange through open doorways, supporting more stable and comfortable indoor conditions. The air curtains are designed to draw in, recirculate and heat indoor air. They can also operate as ambient (unheated) air curtains where heating is not required. The air curtains are suitable for doorways, gates and building openings from 2 to 4 m high.

- Horizontal (Over-Door) Installation Installed above the doorway, with multiple units mounted side by side for wider openings.
- Vertical (Side-Mounted) Installation Installed at either side of the doorway, with multiple units combined where required for larger openings.
- Recessed (Suspended-Ceiling) Installation The air curtains can also be supplied in a recessed version designed for installation in suspended ceilings.

DESCRIPTION

PRODUCT DESCRIPTION

The air curtains consist of the following components:

- A powder-coated sheet steel casing with a full-length discharge slot
- A water heating coil or an electric heater
- 2 or 3 double-inlet centrifugal fans

The air curtains are suspended from the ceiling using threaded rods attached to the casing. The air curtains are available in two sizes and six variants, differing in the number, size and rotational speed of the fans as well as the length of the discharge slots. The electric heater is equipped with overtemperature protection to prevent the maximum permissible operating temperature from being exceeded.

OPERATING CONDITIONS

Water-heated models are designed for operation with heating water temperatures up to 150°C and operating pressures up to 1.5 MPa. Electric-heated models operate on a 400 V three-phase power supply. When selecting an air curtain, an air velocity of at least 3 m/s at floor level should be maintained to ensure effective air protection across the opening.

ul. Lubelska 31, 08-500 Ryki
+48 81 883 56 00
info@juwent.com.pl

KP/DB-1P-105-W

DIMENSIONS

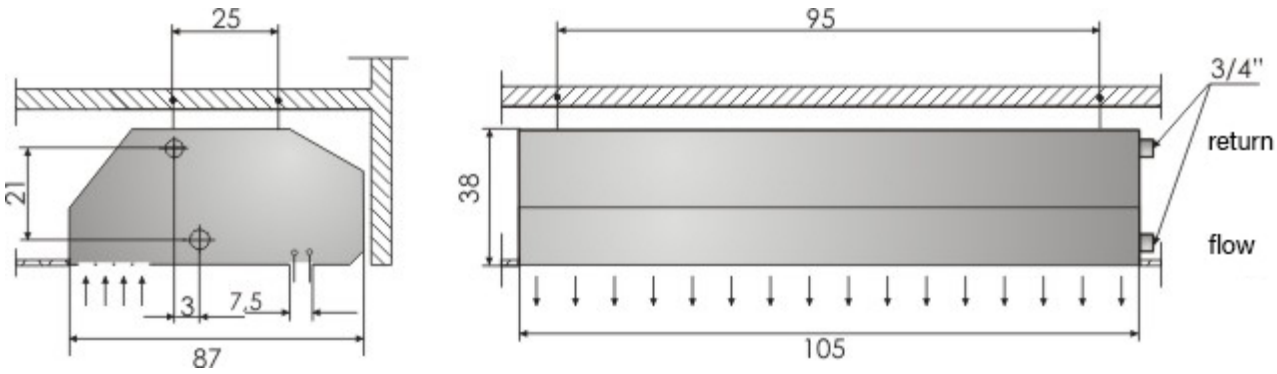

Fan Parameters	
Number of fans	2
Voltage (V)	230
Motor power (kW)	0,15
Current (A)	1,5
Fan speed (rpm)	1350

Airflow and Heating Capacity of Water-Heated Air Curtain				
Airflow (m^3/h)		2700		
Heating capacity (kW), discharge air temperature (°C) and water pressure drop (kPa)				
Water temperatures (°C)	**Entering air temperature (°C)**	**kW**	**°C**	**kPa**
90/70	**5**	19,2	24	2,2
	10	17,4	28	1,8
	15	15,7	31	1,5
80/60	**5**	15,8	21	1,5
	10	14,1	25	1,2
	15	12,5	28	1,0
70/50	**5**	12,6	18	0,9
	10	11,0	21	0,8
	15	9,5	25	0,5
60/40	**5**	9,6	15	0,6
	10	8,1	18	0,4
	15	6,7	22	0,3

ul. Lubelska 31, 08-500 Ryki
+48 81 883 56 00
info@juwent.com.pl

Noise Level (dB(A))	
At a distance of 1 m	66
At a distance of 3 m	62
Weight	
Weight (kg)	60

JUWENT
ul. Lubelska 31, 08-500 Ryki
+48 81 883 56 00
info@juwent.com.pl