JUWENT

OPTIMAX ROTO

COMPACT AIR HANDLING UNITS

CATALOGUE SHEET



CE

TÜV NORD Polska Sp. z o.o.
TÜV® Verified product
No: 0000095996
certyfikat.tuv-nord.pl

CERT Polska Akademia Jakości
PN-EN ISO 9001:2015
Certyfikat nr: 2103/12/2022/J/R

Międzynarodowy Instytut Produkt z Atestem PZH Krajowa Publiczego

PCA Polskie Centrum Akredytacji
Certyfikacja Systemów Zarządzania
AC 137
QMS

Manufactured in accordance with EN 1886 and EN 13053 standards

OPTIMAX-ROTO is a range of energy-efficient compact air handling units that incorporate the latest thermal and ventilation technologies. **The high-efficiency rotary heat exchanger** enables the recovery of thermal energy from exhaust air with up to 90% efficiency. Additionally, **high-efficiency fans with EC motors** are used to minimise electricity consumption. The double-skin panels are **50 mm thick and insulated with mineral wool** to reduce heat loss to the environment and provide excellent acoustic insulation for the operating fans.

The OPTIMAX-ROTO air handling units are supplied fully pre-wired with a built-in, pre-configured control panel. This AHU series includes **7 sizes, providing airflows from 400 to 10,000 m³/h.** They are designed for use in ventilation and air conditioning systems in public, residential, and industrial buildings.

FUNCTIONS OF AIR HANDLING UNIT



AIR FILTRATION

- panel filters
- bag filters



HEATING

- water heating coil
- electric heater
- DX heating coil (condenser)



HEAT RECOVERY

- rotary heat exchanger



AIR TRANSFER

- direct-driven fans with EC and EC motors



COOLING

- reversible DX coil
- water cooling coil
- reversible DX coil (evaporator)



PLUG & PLAY

- built-in control panel and full pre-wiring

AIR FLOW RANGE

SIZE	0	5	10	20	30	40	50
V min (m³/h)	400	700	1000	2000	4000	7500	10500
V max (m³/h)	1000	1800	2800	5800	9900	15000	21000

DESIGN AND CONSTRUCTION

Casing design of OPTIMAX-ROTO air handling units is based on a framework of aluminium profiles. The casing is composed of 50 mm thick double-skin panels insulated with mineral wool. Inspection panels are hinged, fitted with pull handles, and secured using wing thumb screws. The roof version is additionally equipped with a roof and optionally with air intake and air extract cowl. The base frame for each size is constructed using steel profiles.
The OPTIMAX-ROTO air handling units come fully pre-wired with a built-in, pre-configured control panel installed in a basic section. Additionally, air shut-off dampers are fitted inside the basic section to the intake and discharge.

CASING PARAMETERS

The parameters below are provided in accordance with EN 1886:

PARAMETER	mechanical strength	casing air leakage	filter bypass leakage	thermal transmittance	thermal bridging factor
CLASS	D1	L1	F9	T3	TB1

BASIC SECTION WITHOUT MIXING CHAMBER

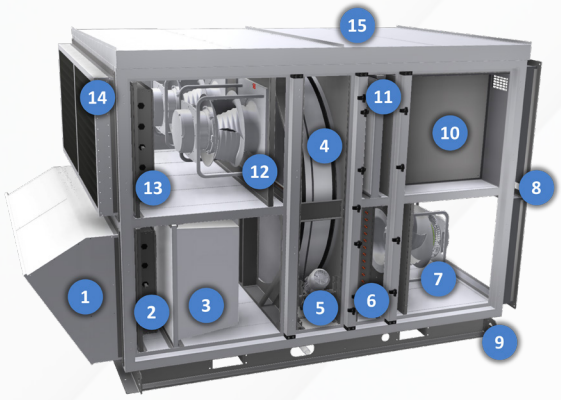

BASIC SECTION WITH MIXING CHAMBER



AHU Components

1. Air intake cowl
2. Outdoor Air Damper
3. Outdoor Air Filter
4. Rotary Heat Exchanger
5. Rotary Heat Exchanger Drive
6. Water/Electric Heater
7. Supply Fan with AC/EC Motor
8. Flexible Connector
9. Base Frame
10. Electrical Control Panel
11. Exhaust Air Filter
12. Exhaust Fan with AC/EC Motor
13. Extract Air Damper
14. Air Extract Cowl
15. Roof
16. Mixing Chamber
17. Air Recirculation Damper

The two versions of the basic section shown above differ in the presence or absence of a mixing chamber, the position of the fans relative to the rotary heat exchanger (upstream or downstream), and the type of fresh air filter used. The version without a mixing chamber is equipped with a bag-type fresh air filter, and both fans are positioned upstream of the rotary heat exchanger, operating in suction mode. The version with a mixing chamber is fitted with a panel-type fresh air filter, the supply fan operates in suction mode, while the exhaust fan operates in discharge mode.

ADDITIONAL AHU SECTIONS

COOLING COIL SECTION

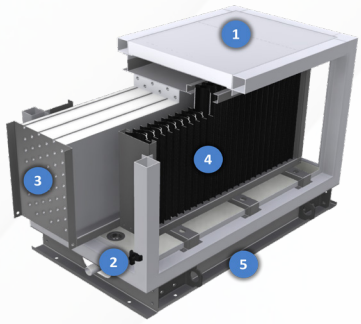

1. Casing
2. Condensate Drip Tray
3. Cooling Coil
4. Droplet Eliminator
5. Base Frame

SOUND ATTENUATOR SECTION

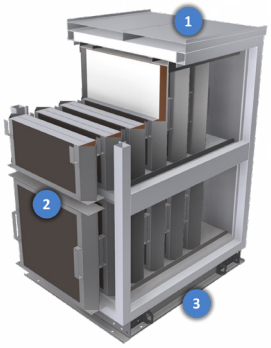

1. Casing
2. Removable Baffles
3. Base Frame

FINAL FILTER SECTION

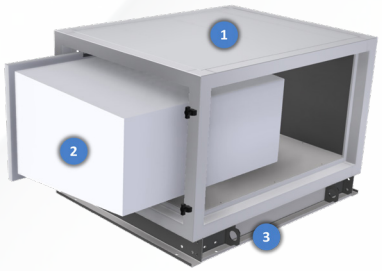

1. Casing
2. Filter
3. Base Frame

OUTSIDE DIMENSIONS OF THE UNIT

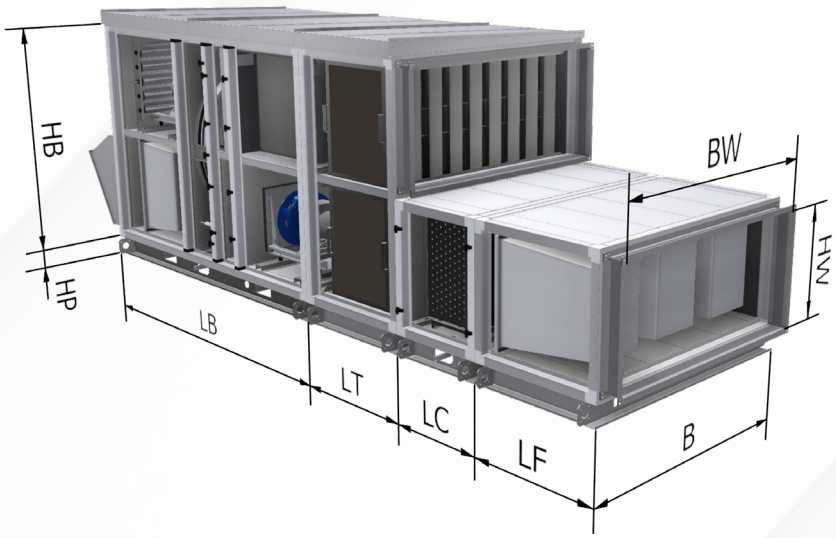

DIMENSION / SIZE	B	HB	LB	LBm*	BW	HW	LC	HP	LT	LF
0	700	700	1600	1600	600	250	600	100	800	800
5	900	800	1600	1600	800	300	600	100	800	800
10	900	900	1800	2000	800	350	600	100	800	800
20	1200	1200	1900	2000	1100	500	600	100	800	800
30	1500	1500	2200	2250	1400	650	600	100	800	800
40	1800	1800	2500	2550	1700	800	600	100	800	800
50	2100	2100	2700	2700	2000	950	600	100	800	800

LBm* applies to the basic section with mixing chamber. All dimensions are in [mm]

DESIGNATION

OPTIMAX-ROTO - 10 - EC2 - P - ZV - K - M - NLW / CLW - TZ - FD

UNIT SIZE
0, 5, 10, 20, 30, 40, 50

TYPE AND NUMBER OF FANS
EC1/AC1 – one EC or AC supply fan and one EC or AC exhaust fan
EC2/AC2 – two EC or AC supply fans and two EC or AC exhaust fans

ACCESS SIDE
P – right-hand
L – left-hand

VERSION
W – indoor, 4 flexible connectors
ZK – outdoor, 4 flexible connectors
ZC – outdoor, 3 flexible connectors, + air intake cowl
ZW – outdoor, 3 flexible connectors + air extract cowl
ZV – outdoor, 2 flexible connectors + air extract cowl+ air intake cowl

HEAT EXCHANGER TYPE
P – condensation
K - condensation epoxy-coated
E – hygroscopic
N – sorption
M – mixing chamber

HEATING COIL
NLW – water coil
NE – electric
SF – condenser

COOLING COIL
CLW – water coil
CF – evaporator coil
SCF – reversible DX coil

SOUND ATTENUATORS
TZ – street side sound attenuator
TW – room side sound attenuator

FILTERS
FD – super fine filter

OPERATING CONDITIONS

The units must not be used under the following conditions:

- The air being transferred may contain solid, pasty, fibre and aggressive substances causing corrosion or decomposition of zinc, copper, steel and aluminium.
- Temperature and humidity values for external air in summer or winter fall outside the limits specified for Europe.
- Operation is expected in maritime or tropical climates.
- The air is excessively dusty, requiring frequent replacement of air filters within the unit.
- Prolonged power supply interruptions occur, which may disrupt hot water production and compromise regulation and control systems. Consequently, even high-performance automatic safety mechanisms may fail to prevent heating coils from freezing, potentially leading to coil damage, property damage, and other associated losses.
- The limit values of certain operational parameters are exceeded:
  - Minimum supply temperature of the heat transfer medium in the water heating coil: 20°C
  - Maximum supply temperature of the heat transfer medium in the water heating coil: 130°C
  - Maximum operating pressure of the water heating coil: 1.5 MPa
  - Minimum temperature of the handled air: -35°C
  - Maximum temperature of the handled air: +35°C
  - Minimum ambient temperature: -35°C
  - Maximum ambient temperature: +50°C

AVAILABLE VERSIONS

Sstandard version: Suitable for most ventilation system applications where there are no specific requirements for increased resistance to chemicals and their vapours in the ambient or transported air.

Hygienic version HS: Designed for environments requiring higher resistance to chemicals and their vapours in the ambient or transported air. This version is ideal for use in the food and pharmaceutical industries or healthcare facilities, except for class S1 rooms such as operating theatres.

Swimming Pool Version: Specifically tailored for environments such as swimming pool facilities and indoor pool areas, where chemical vapours from water treatment processes are present in the surrounding or transported air.

AHU COMPONENTS		AHU VERSIONS		
		STANDARD	HYGIENIC HS	SWIMMING POOL
CASING	framework	aluminium	aluminium	epoxy coated aluminium
	inner skin – walls	galvanised steel	aluzinc/magnelis	epoxy coated galvanised steel
	inner skin – ceiling	galvanised steel	aluzinc/magnelis	epoxy coated galvanised steel
	inner skin – floor	galvanised steel	acid-proof stainless steel	epoxy coated galvanised steel
	outer skin	aluzinc/magnelis	aluzinc/magnelis	aluzinc/magnelis
	internal structural elements	galvanised steel	acid-proof stainless steel	epoxy coated galvanised steel / acid-proof stainless steel
	insulation	mineral wool	mineral wool	mineral wool
	base-frame	galvanised steel	galvanised steel	galvanised steel
AIR DAMPERS	frame	galvanised steel	acid-proof stainless steel	epoxy coated galvanised steel
	blades	aluminium	aluminium	epoxy coated aluminium
COILS	frame	galvanised steel	acid-proof stainless steel	epoxy coated galvanised steel
	fins	aluminium / epoxy coated aluminium	aluminium / epoxy coated aluminium	epoxy coated aluminium
	tubes	copper	copper	copper
CONDENSATE DRIP TRAY	condensate drip tray	prepainted galvanised steel/ acid-proof stainless steel	prepainted galvanised steel/ acid-proof stainless steel	epoxy coated galvanised steel / acid-proof stainless steel
	drain connection	plastic	plastic	plastic
BAFFLES OF SOUND ATTENUATORS	frame	galvanised steel	acid-proof stainless steel	epoxy coated galvanised steel
	infill	mineral wool covered with fabric	mineral wool covered with fabric	mineral wool covered with fabric
FANS	impeller	plastic	plastic	plastic
	motor	prepainted steel	prepainted steel	prepainted steel
	frame	galvanised steel	epoxy coated galvanised steel	epoxy coated galvanised steel
DROPLET ELIMINATOR	frame	galvanised steel	acid-proof stainless steel	epoxy coated galvanised steel
	blades	plastic	plastic	plastic
FLEXIBLE CONNECTORS	frame	galvanised steel	galvanised steel	epoxy coated galvanised steel
	flexible strip	galvanised steel	galvanised steel	acid-proof stainless steel
CORROSION CLASS	inner skin / outer skin	C3/C4	C3/C4	C3/C3

CONTROL SYSTEMS

Our air handling units feature advanced control systems, meticulously designed to accelerate and simplify the startup process. The factory-configured control system including built-in electrical control panel and pre-wiring ensures optimal comfort at minimal operating costs while providing safety and monitoring to protect control devices from damage.

The electrical control panel, pre-installed in the basic section of the unit, features an integrated controller and a remote touchscreen display, offering a plug-and-play electrical connection. It comes equipped with all necessary automation components, as well as terminals for connecting the supply air temperature sensor, heating/cooling valve actuators, pumps, and other components. etc.

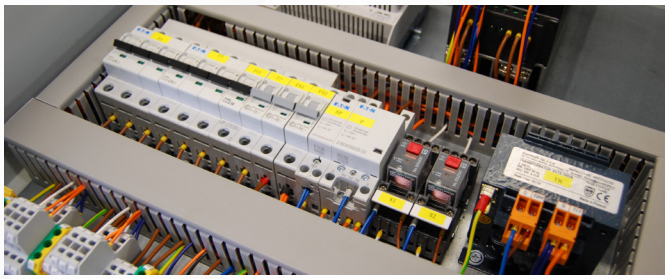

A key benefit of the integrated control system is the elimination of additional wiring between automation components and the electrical control panel.

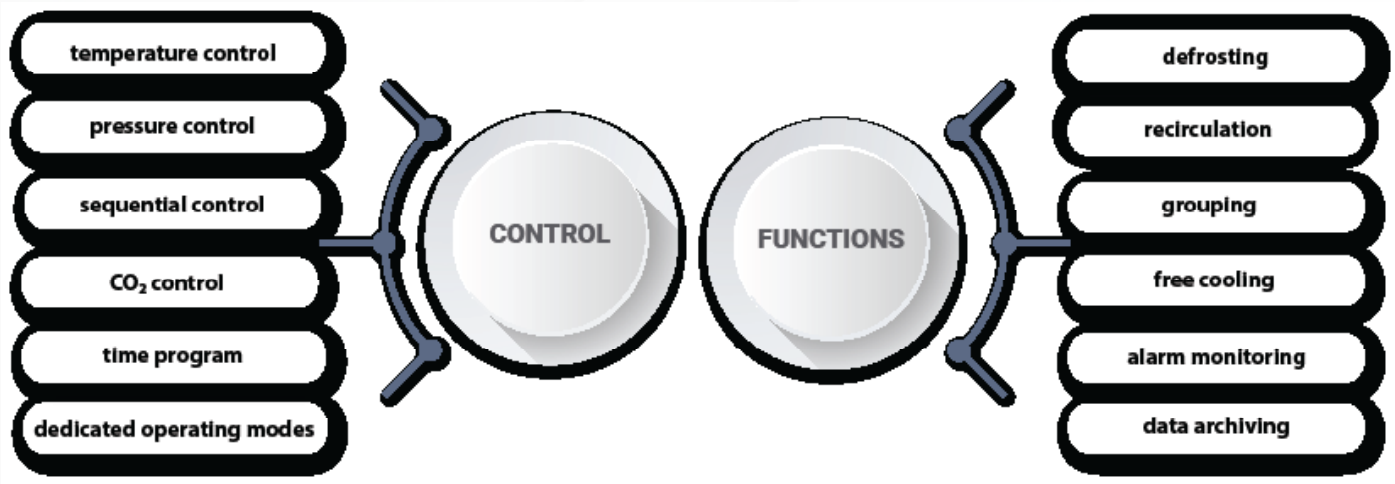

The built-in web server and multiple communication protocols enable remote control and monitoring via a web interface, offering a more comprehensive and user-friendly overview of operating parameters compared to a standard controller display. This solution also facilitates seamless integration with other HVAC units and building automation systems, ensuring unified management and optimized performance across all connected devices.



JUWENT DESIGN AIDS AND 3D BIM MODELS

Effective design depends on cutting-edge tools, which is why we are proud to introduce our innovative design aids and 3D **BIM** models, transforming the way professionals approach HVAC system design. All our air handling units are now available as 3D **BIM** models, specifically developed to meet the diverse needs of architects, engineers, MEP designers, and HVAC specialists. These tools simplify and streamline the design process, ensuring seamless integration into modern building projects. We are committed to providing our clients with comprehensive solutions that align with the latest industry standards, supporting efficient and precise project execution.

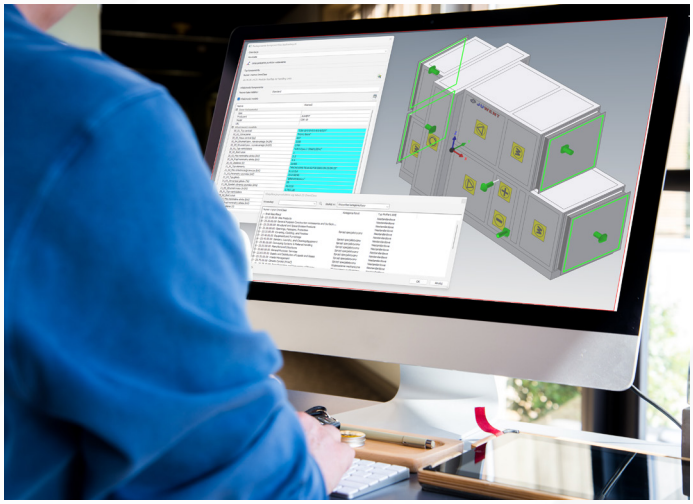

What is **BIM**? Building Information Modeling (BIM) is a digital process for creating, managing, and sharing building and infrastructure data using intelligent 3D models. These models incorporate geometry, materials, technical specifications, schedules, cost estimates, and operational details, making them invaluable throughout a building's entire lifecycle — from design and construction to operation and maintenance. **BIM** enhances project management by minimizing errors, optimizing costs, and improving collaboration between all stakeholders, ensuring better communication and decision-making.

RFA files are a key component of Autodesk Revit®, one of the most widely used **BIM** platforms. These files define objects, such as air handling units, with detailed geometry, parameters, graphical properties, and essential technical information for seamless integration within a BIM model.

The Autodesk Revit® provides design offices with an efficient way to model and coordinate building installations in a unified environment, facilitating accuracy and consistency across all project stages. One of the latest BIM innovations is a newly available BIM model generator, providing a unique solution for design processes. This advanced tool provides unmatched flexibility in generating 3D models of JUWENT air handling units while allowing for customized configurations and defining parameters in accordance with specific project requirements.

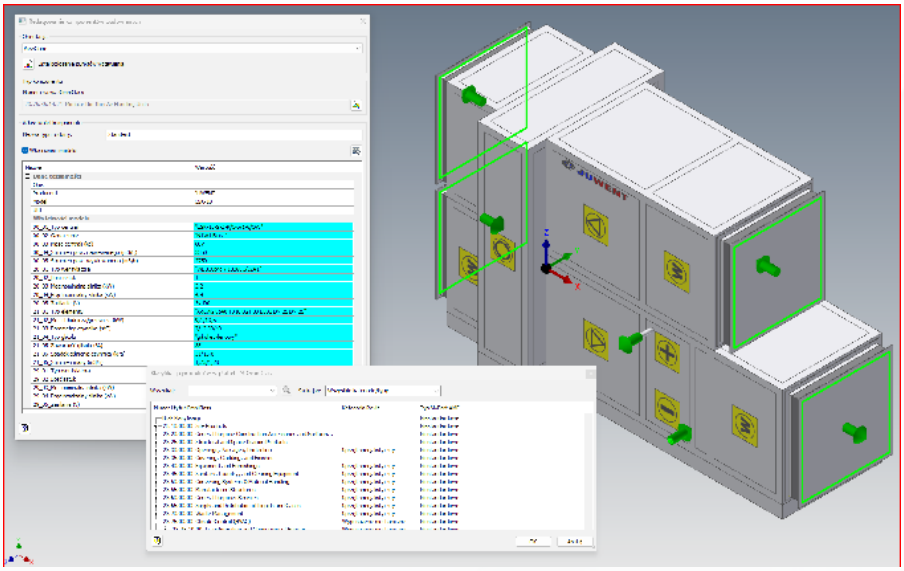

By integrating seamlessly with the **Revit**® platform, the generator not only accelerates the design process but also ensures data consistency and compatibility throughout the entire project. With these advanced **BIM** solutions, JUWENT empowers design professionals with greater precision, efficiency, and flexibility, ensuring seamless integration of air handling units into modern building projects.

PRODUCT SELECTION TOOL

Recognizing the growing importance of mobile devices with internet access in our daily lives, we have designed and implemented a versatile product selection tool.

This web-based solution works seamlessly on any device with an internet connection and a web browser, allowing users to select our products anytime, anywhere, regardless of location or device.

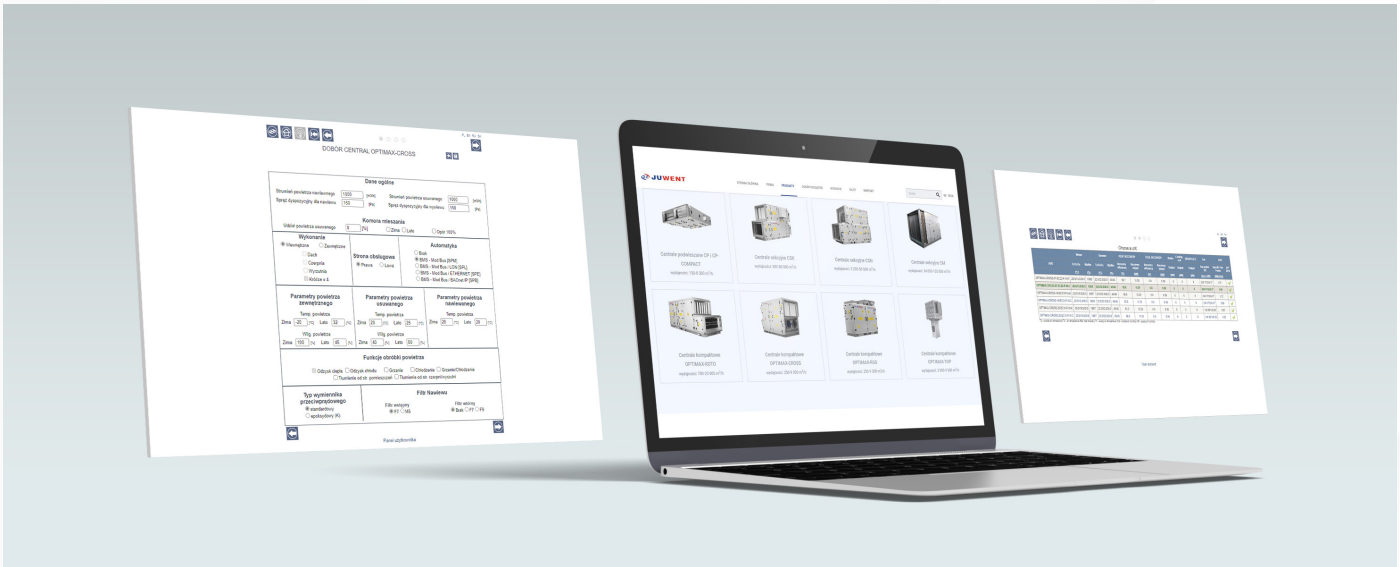

The online program ensures correct product selection, presenting all essential parameters and generating a detailed summary report for easy review and printing. With no installation required, it provides a professional, efficient, and time-saving selection process—accessible directly from our website at **www.juwent.com.pl.**