

OPTIMAX-TOP Ductless Air Handling Units

The OPTIMAX-TOP is a series of energy-efficient ductless air handling units that incorporate the latest thermal and ventilation technology. This series includes **4** unit types with airflows from **1,000 to 12,000 m^3/h**.: **OPTIMAX-TOP-O**: Supply and exhaust unit with heat recovery. **OPTIMAX-TOP-NW**: Supply and exhaust unit with recirculation. **OPTIMAX-TOP-N**: Supply unit with recirculation. **OPTIMAX-TOP-R**: Recirculation unit. The high-efficiency rotary heat exchanger enables the recovery of thermal energy from exhaust air with up to **90%** efficiency. Additionally, the high-efficiency fans with **EC** motors are used to minimize electricity consumption. The double-skin panels are **50 mm** thick and insulated with mineral wool to reduce heat loss to the environment. They also provide excellent acoustic insulation for the working fans. **The OPTIMAX-TOP** air handling units come fully pre-wired with a built-in, pre-configured control panel. They are equipped with air distributors featuring swirl diffusers that provide direct air distribution to the serviced space, removing the need for additional ventilation ductwork. They are designed for use in facilities such as sports halls, warehouses, production halls, stores, and other large industrial and public-use spaces.

JUWENT

31 Lubelska str., 08-500 Ryki
+48 502 087 841, +48 664 465 243
export@juwent.com.pl

OPTIMAX-TOP-O-60

DIMENSIONS

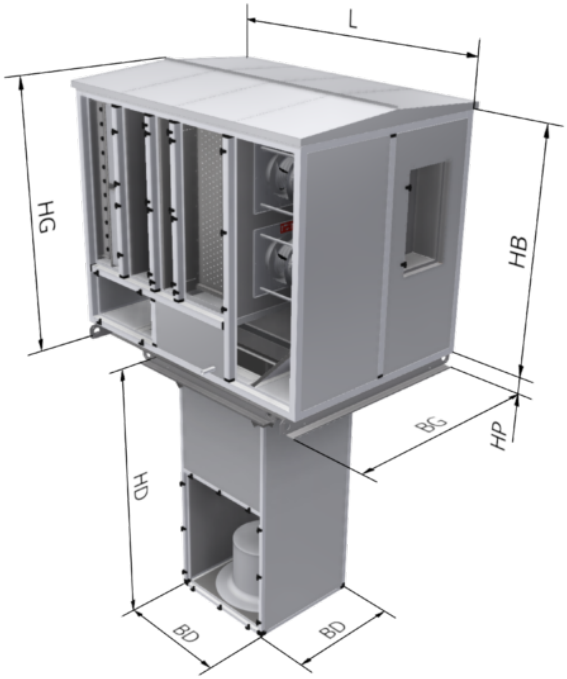

Dimensions						
HG [mm]	HB [mm]	HP [mm]	BG [mm]	L [mm]	HD [mm]	BD [mm]
1940	1700	120	1550	2150	2000	900

The standard version of the AHU can be modified in terms of the materials used after consultation with our technical department.
The modifications' scope must be approved during the quotation preparation stage.

JUWENT
31 Lubelska str., 08-500 Ryki
+48 502 087 841, +48 664 465 243
export@juwent.com.pl

OPTIMAX-TOP-O-90

DIMENSIONS

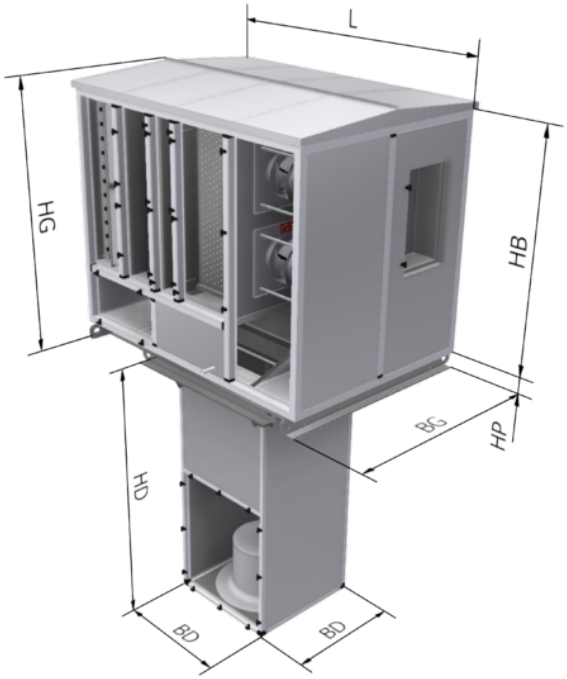

Dimensions						
HG [mm]	HB [mm]	HP [mm]	BG [mm]	L [mm]	HD [mm]	BD [mm]
2140	1900	120	1750	2250	2000	1100

The standard version of the AHU can be modified in terms of the materials used after consultation with our technical department.
The modifications' scope must be approved during the quotation preparation stage.

JUWENT
31 Lubelska str., 08-500 Ryki
+48 502 087 841, +48 664 465 243
export@juwent.com.pl

OPTIMAX-TOP-NW-60

DIMENSIONS

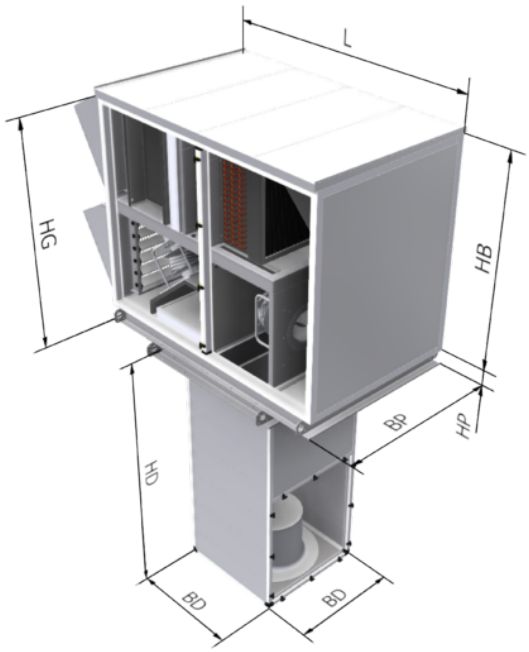

Dimensions						
HG [mm]	HB [mm]	HP [mm]	BP [mm]	L [mm]	HD [mm]	BD [mm]
1800	1600	120	1300	2050	2000	900

The standard version of the AHU can be modified in terms of the materials used after consultation with our technical department.
The modifications' scope must be approved during the quotation preparation stage.

JUWENT
31 Lubelska str., 08-500 Ryki
+48 502 087 841, +48 664 465 243
export@juwent.com.pl

OPTIMAX-TOP-NW-90

DIMENSIONS

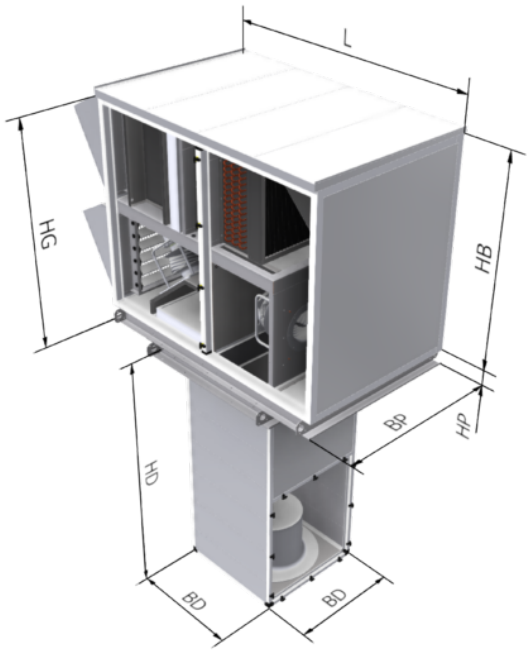

Dimensions						
HG [mm]	HB [mm]	HP [mm]	BP [mm]	L [mm]	HD [mm]	BD [mm]
2050	1850	120	1500	2250	2000	1100

The standard version of the AHU can be modified in terms of the materials used after consultation with our technical department.
The modifications' scope must be approved during the quotation preparation stage.

JUWENT
31 Lubelska str., 08-500 Ryki
+48 502 087 841, +48 664 465 243
export@juwent.com.pl

OPTIMAX-TOP-N-60

DIMENSIONS

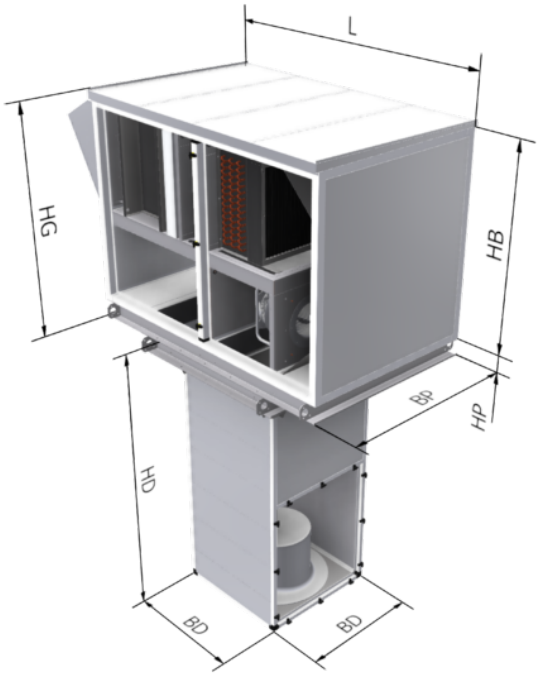

Dimensions						
HG [mm]	HB [mm]	HP [mm]	BP [mm]	L [mm]	HD [mm]	BD [mm]
1570	1400	120	1300	2050	2000	900

The standard version of the AHU can be modified in terms of the materials used after consultation with our technical department.
The modifications' scope must be approved during the quotation preparation stage.

JUWENT
31 Lubelska str., 08-500 Ryki
+48 502 087 841, +48 664 465 243
export@juwent.com.pl

OPTIMAX-TOP-N-90

DIMENSIONS

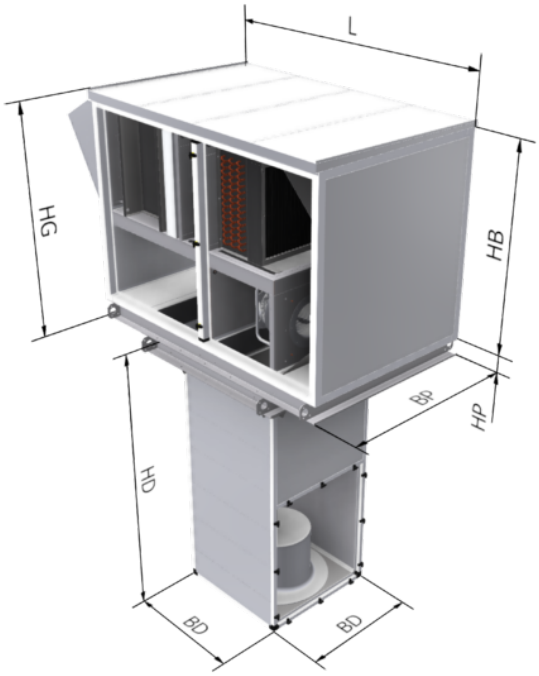

Dimensions						
HG [mm]	HB [mm]	HP [mm]	BP [mm]	L [mm]	HD [mm]	BD [mm]
1780	1600	120	1500	2250	2000	1100

The standard version of the AHU can be modified in terms of the materials used after consultation with our technical department.
The modifications' scope must be approved during the quotation preparation stage.

JUWENT
31 Lubelska str., 08-500 Ryki
+48 502 087 841, +48 664 465 243
export@juwent.com.pl

OPTIMAX-TOP-R-25

DIMENSIONS

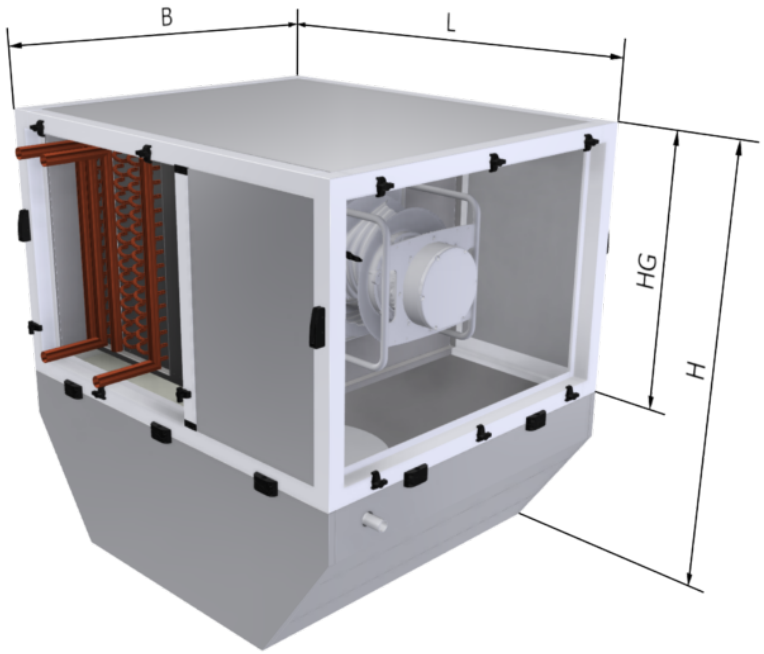

Dimensions			
HG [mm]	**H [mm]**	**B [mm]**	**L [mm]**
600	1100	800	1200

The standard version of the AHU can be modified in terms of the materials used after consultation with our technical department.
The modifications' scope must be approved during the quotation preparation stage.

JUWENT
31 Lubelska str., 08-500 Ryki
+48 502 087 841, +48 664 465 243
export@juwent.com.pl

OPTIMAX-TOP-R-40

DIMENSIONS

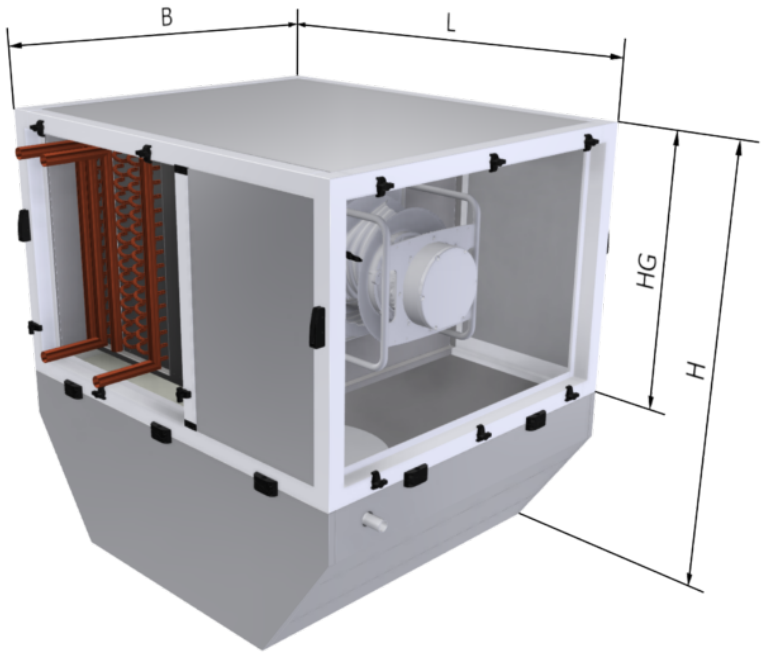

Dimensions			
HG [mm]	**H [mm]**	**B [mm]**	**L [mm]**
800	1300	800	1200

The standard version of the AHU can be modified in terms of the materials used after consultation with our technical department.
The modifications' scope must be approved during the quotation preparation stage.

JUWENT
31 Lubelska str., 08-500 Ryki
+48 502 087 841, +48 664 465 243
export@juwent.com.pl

OPTIMAX-TOP-R-60

DIMENSIONS

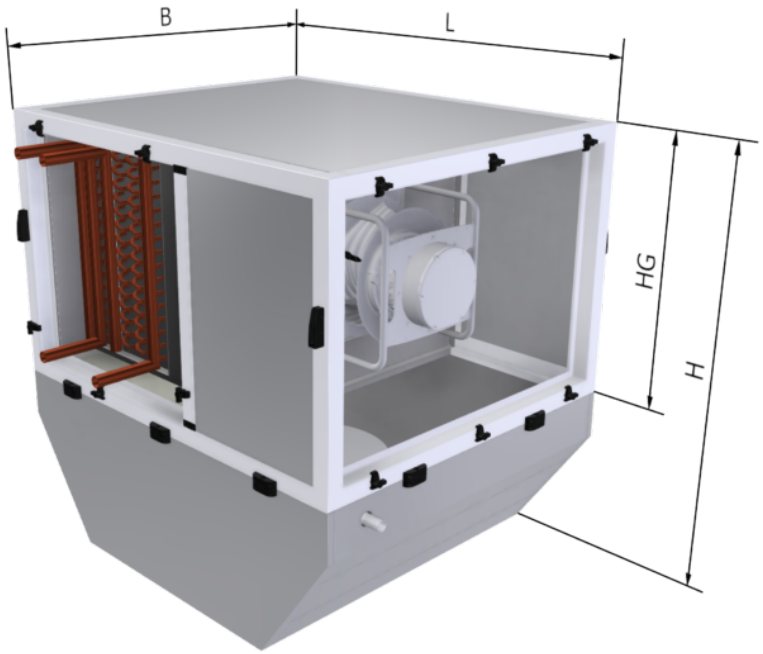

Dimensions			
HG [mm]	**H [mm]**	**B [mm]**	**L [mm]**
800	1300	1100	1300

The standard version of the AHU can be modified in terms of the materials used after consultation with our technical department. The modifications' scope must be approved during the quotation preparation stage.

JUWENT
31 Lubelska str., 08-500 Ryki
+48 502 087 841, +48 664 465 243
export@juwent.com.pl

OPTIMAX-TOP-R-90

DIMENSIONS

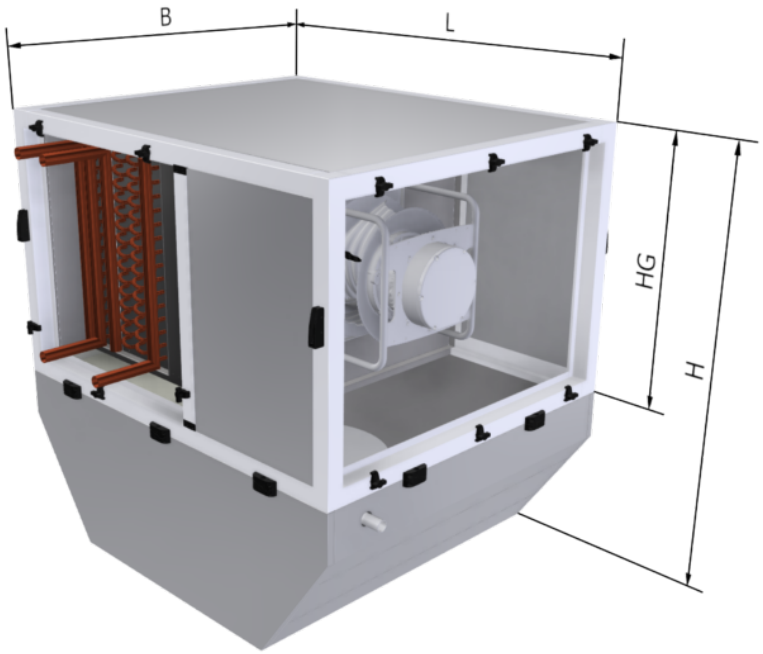

Dimensions			
HG [mm]	**H [mm]**	**B [mm]**	**L [mm]**
1100	1700	1100	1300

The standard version of the AHU can be modified in terms of the materials used after consultation with our technical department. The modifications' scope must be approved during the quotation preparation stage.

JUWENT
31 Lubelska str., 08-500 Ryki
+48 502 087 841, +48 664 465 243
export@juwent.com.pl

OPTIMAX-TOP-R-120

DIMENSIONS

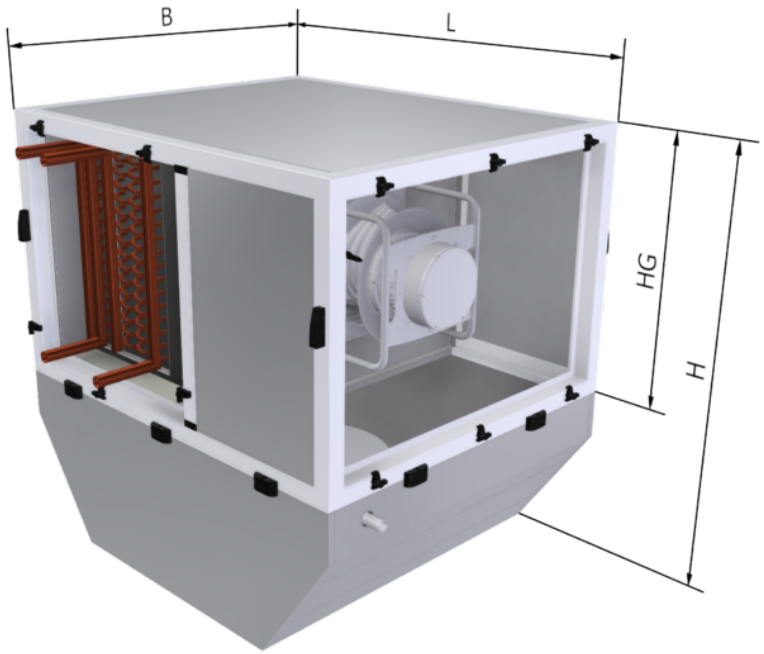

Dimensions			
HG [mm]	**H [mm]**	**B [mm]**	**L [mm]**
1100	1700	1400	1300

The standard version of the AHU can be modified in terms of the materials used after consultation with our technical department.
The modifications' scope must be approved during the quotation preparation stage.

JUWENT
31 Lubelska str., 08-500 Ryki
+48 502 087 841, +48 664 465 243
export@juwent.com.pl